VFU71BRX

Sink material	Stainless steel
Sink type	Single-pressed bowl
No. of bowls	1
EAN code	8017709366155

Aesthetics

Aesthetics	Universal	**Building in type**	Flush fitted, Flat, Undermount
Colour	Brass	**Logo**	Embossed
Finishing	PVD Brushed	**Tap hole / precut tap hole**	No Taphole
Series	Mira		

	Bowl type	Bowl dimensions, WxDxH (mm)	Bowl depth (mm)	Radius corner bowl	Overflow	Strainer position	Strainer dimension
Bowl	Minimum radius	710 x 400 x 200	200	15	Yes, flush fitted	Wall position	3.5"

Technical Features

Characteristics composite material	Coating thickness , Eco-friendly, Pre-assembled gasket, Hypoallergenic	**Height from kitchen top**	1 mm
Dimensions of the product WxDxH (mm)	200x750x440 mm	**Base unit size**	80 cm
Cutout dimension (mm)	735*425 mm	**No. of clips**	8
Cutout dimension undermount (mm)	712*402 mm	**Type of clips**	Standard + undermount clip
Cutout radius	16 mm	**Possibility to install waste disposal**	Yes, single

Accessories Included

Accessories for installation	Strainer, Siphon with dishwasher outlet connection, Fixing clips, Silicone

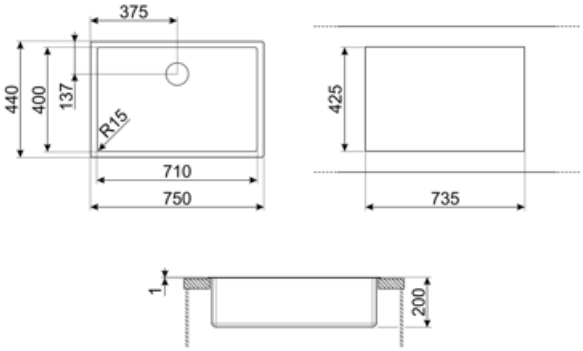

Compatible Accessories

KITFD050

Waste disposal 0,5 HP Motor: 1/2 horsepower Fits all sinks with 3 1/2" waste outlet

KITFD075

Waste disposal 0,75 HP Motor: 3/4 horsepower Fits all sinks with 3 1/2" waste outlet

KITFD100

Waste disposal 1 HP Motor: 1 horsepower Fits all sinks with 3 1/2" waste outlet

STABMIX

Tap brace

Symbols glossary

Cupboard width required for sink installation

Sink depth - depending on the model, the depth can be from13 to 24,5

Flat: Installation of productwith flat edge.

Flush-fitted installation: Models of sinks/hobs which are integrated flush with the tabletop of a kitchen unit.

Under table top installation: The sink is fixed under tabletop, which extends the work surface and the depth of the sink.

Easy to clean

Coating thickness between 0.2mm and 2mm

PVD coatings are hypoallergenic and suitable for use in contact with food

The manufacturing process of PVD treatment is 100% green and eco-friendly

Benefit

One bowl

A single bowl for greater adaptability, capacity and space optimisation

Waste Kit

Possibility to install the waste disposal KITFD100 to easily dispose of organic waste, saving time and effor

The waste disposal is the ideal solution for a clean and sustainable kitchen: simple to use and compact, it disposes of food waste directly from the sink, reducing kitchen bad smells and improving hygiene